U-E10/1mm, U-E20/2mm / Use under tile

BC-Series

©copyright, 2018, BUZON PEDESTAL INTERNATIONAL

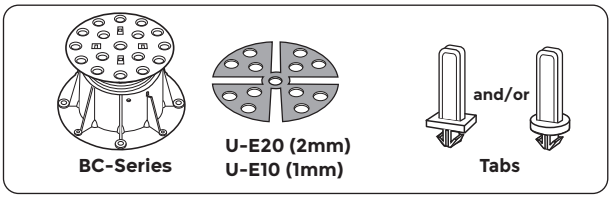

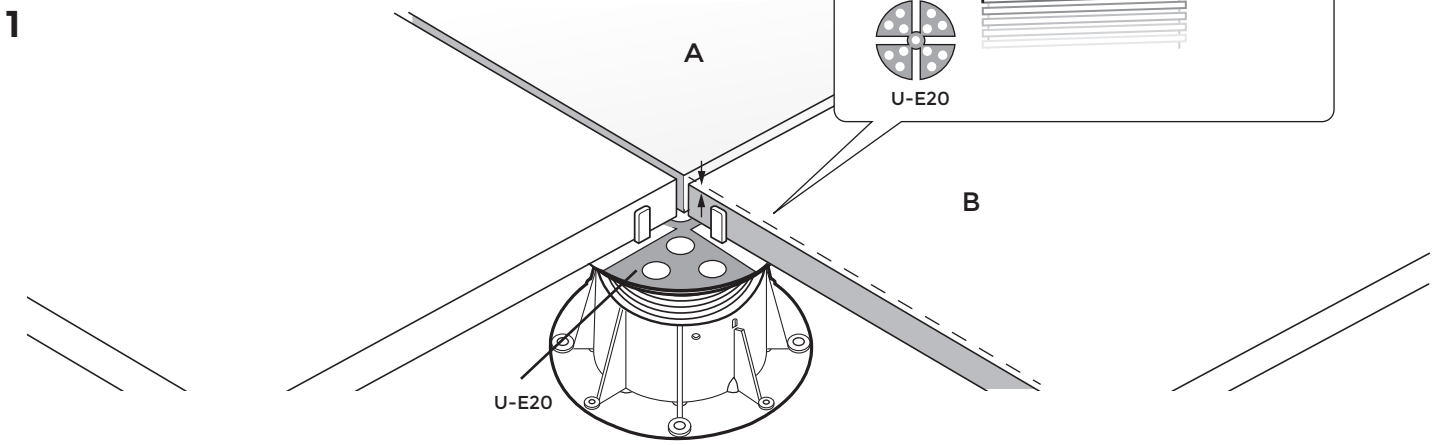

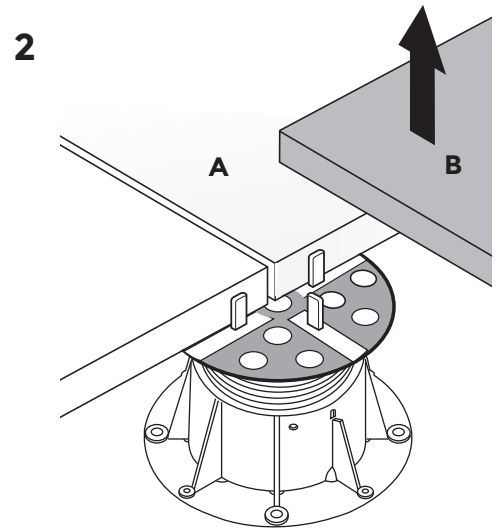

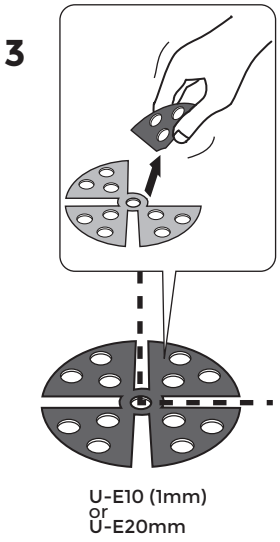

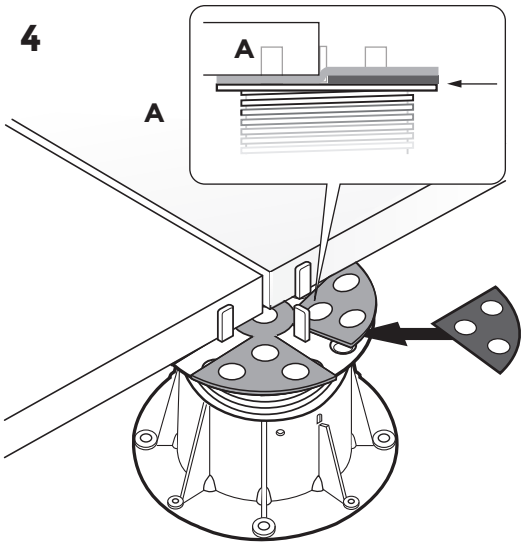

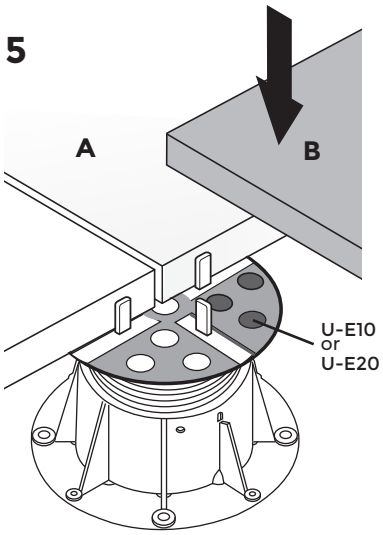

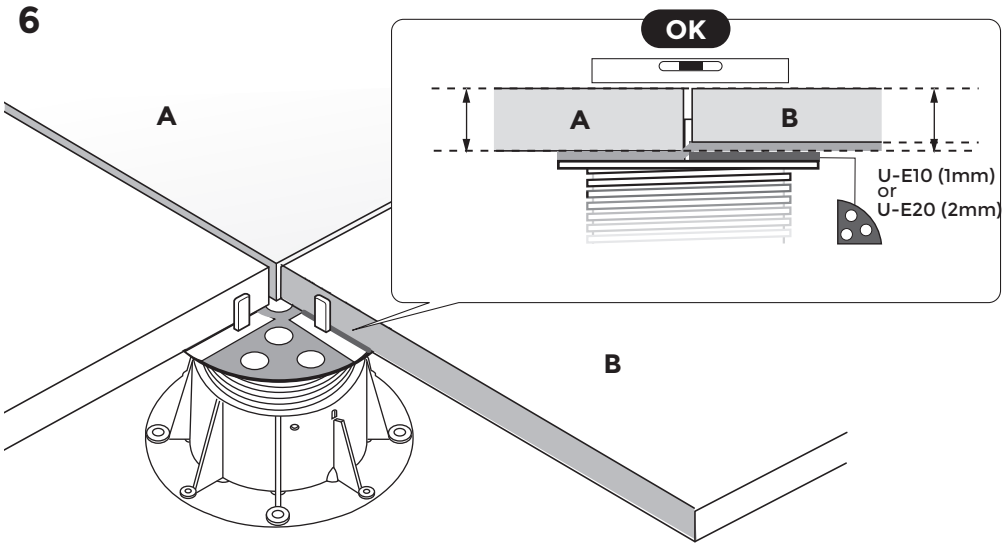

Ref. 5 GNO 77 Rev.0 20/02/2018

The content of this document is not contractual and constitutes only a suggestion of use. Subject to error, omission or modification.